SPECIALTY FITTINGS

Hydraulic Shut Off Fittings

Alemite Hydraulic Shut Off Fittings positively shut off at specified pressure, preventing over-lubrication and damaging of bearing seals.

FEATURES:
- Exceeds 72 hours salt spray test
- Dirt excluding check ball
- Trivalent zinc plating
- RoHs compliant

Product #	Configuration	Hex Size	Overall Length	Shank Length	Shutt-off Pressure
1940-B	60°	5/8"	1"	17/64"	5-20 psi
1795-B	60°	5/8"	1"	17/64"	60-110 psi

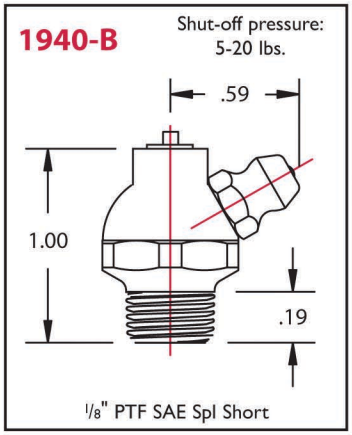

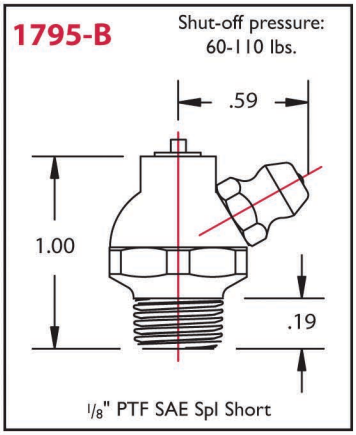

Bullet Nose Fitting
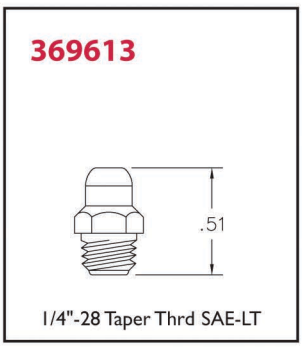
Product #	Thread	Configuration	Hex Size	Overall Length
369613	1/4-28 SAE-LT	Straight	0.28"	0.51"